Autonomous Robot

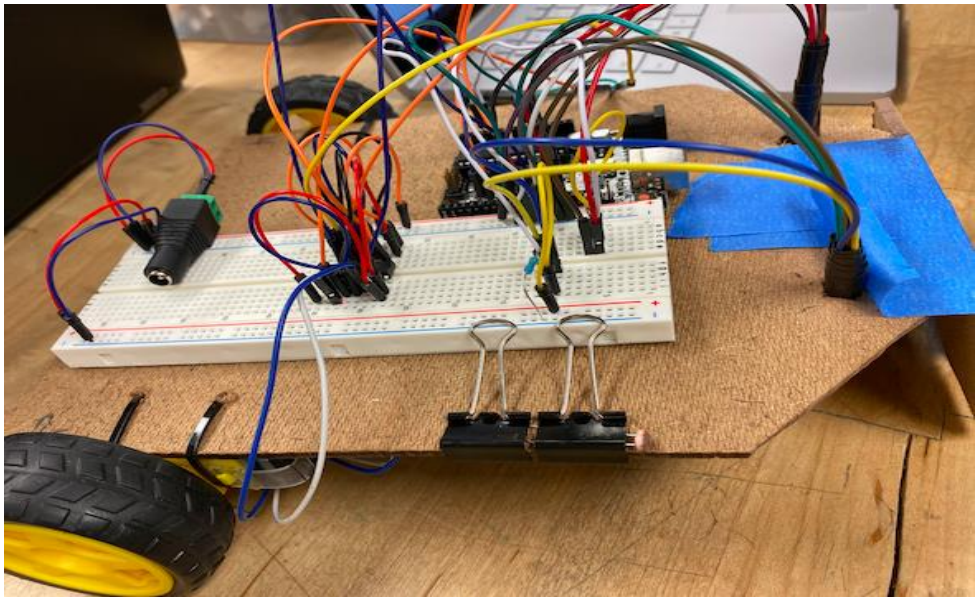

A. **Engineering Drawings (CAD)**

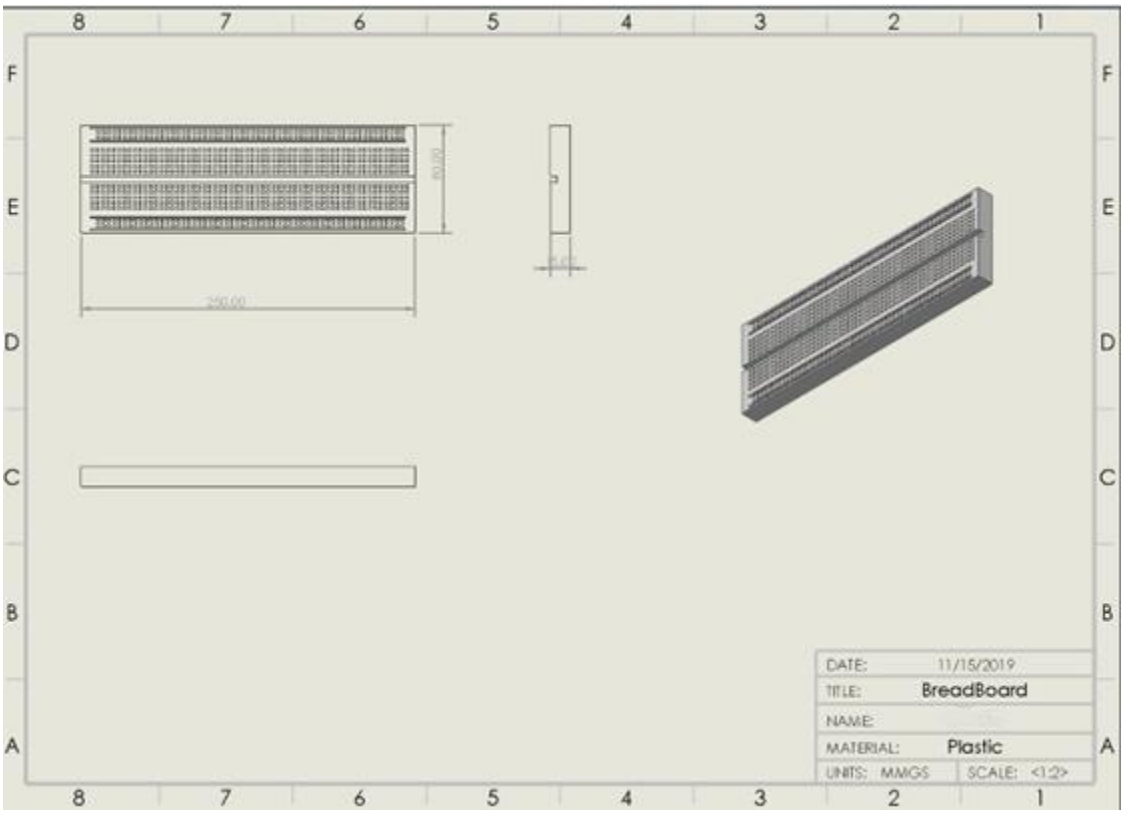

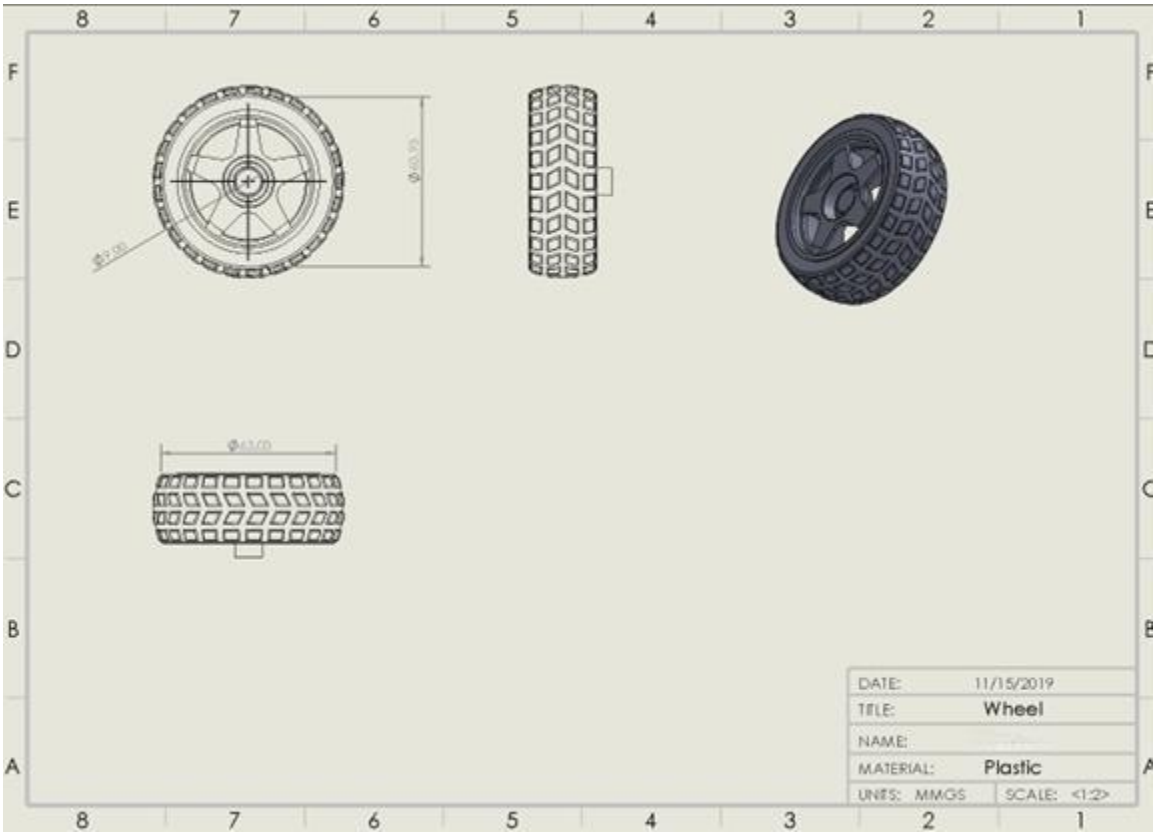
DATE: 11/15/2019
TITLE: Wheel
NAME:
MATERIAL: Plastic
UNITS: MMGS
SCALE: <1:2>

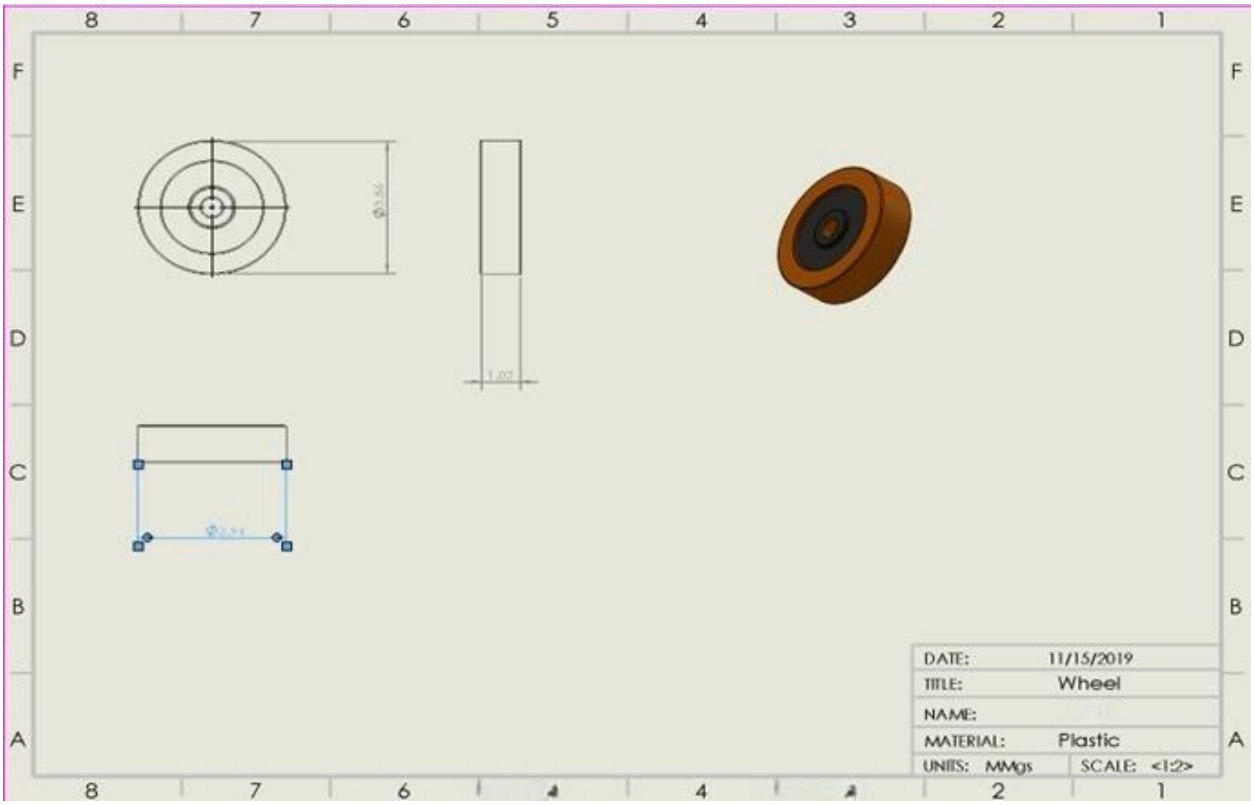
DATE: 11/15/2019
TITLE: Wheel
NAME:
MATERIAL: Plastic
UNITS: MMgs
SCALE: <1:2>

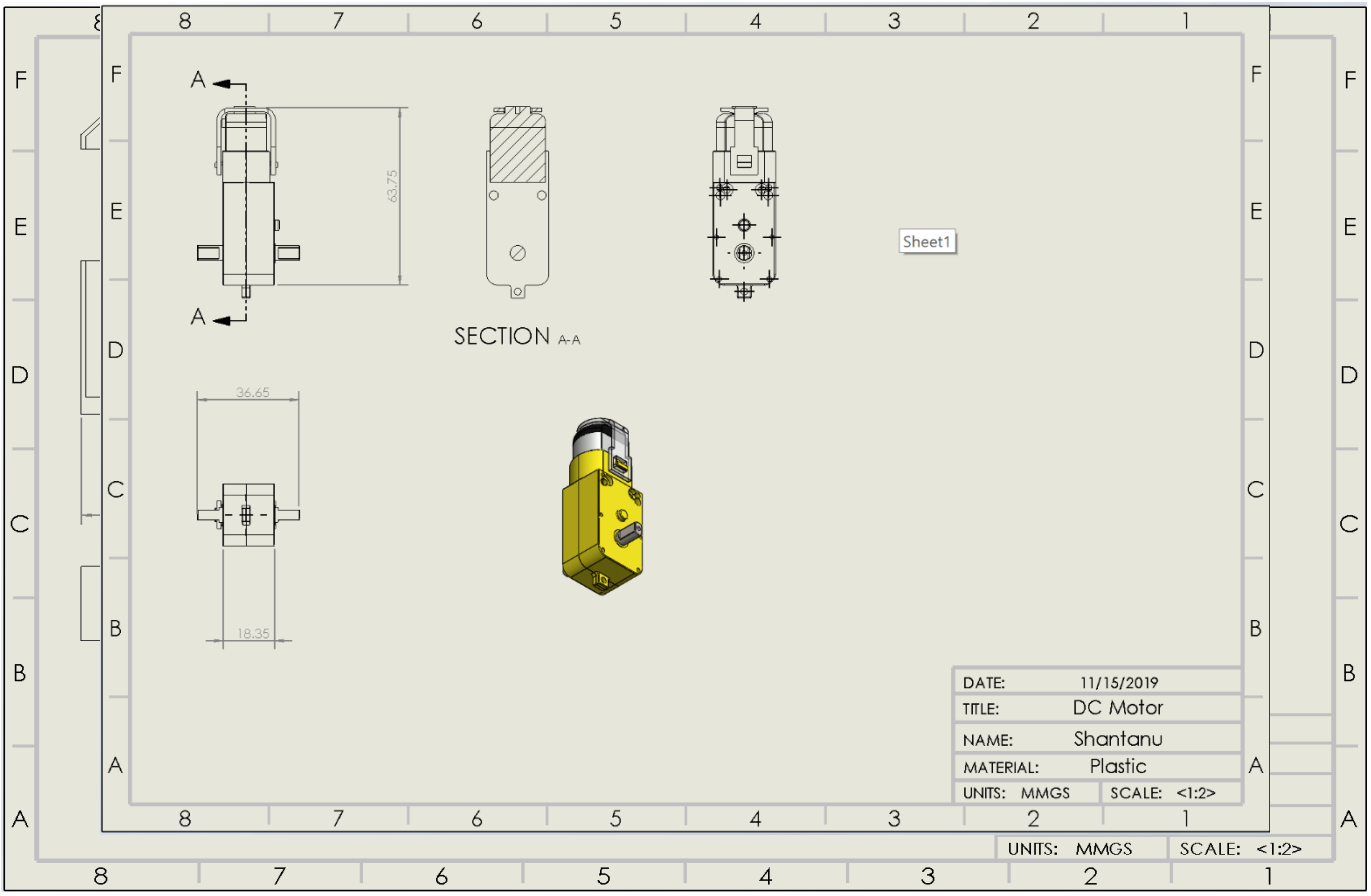
A
A
63.75
SECTION A-A
Sheet1
36.65
18.35
DATE: 11/15/2019
TITLE: DC Motor
NAME: Shantanu
MATERIAL: Plastic
UNITS: MMGS
SCALE: <1:2>

B. **Detailed Bill of Materials and Cost and Environmental Impact**

Part	QTY	Material	Vendor	Cost ($)	Volume (cm^3)	Mass (kg)	Embodied Energy (MJ)	Embodied Carbon (kg CO_2)
Frame	1	MDF	Home Depot	$1.66	476.85	0.430	3.96	0.1332
3rd Wheel	1	Wood		$0.50	40.67	0.06	1.046	0.03081
Battery	1	-	-	$15.99	-	0.11	-	-
DC Motor	2	-				0.033		
Wheel	2	Rubber	-	$6.50	-	0.019	-	-
		Plastic	-			0.01		
Photoresistor	2	Metal	-	-	-	<0.003	-	-
Arduino	1	-	-	-	-	0.028	-	-
Wires	12	-	-	-	-	0.06	-	-
Breadboard	1	-	-	-	-	0.076	-	-
Total	22			$24.65		0.828	5.006	0.16401

C. **Hardware Setup**

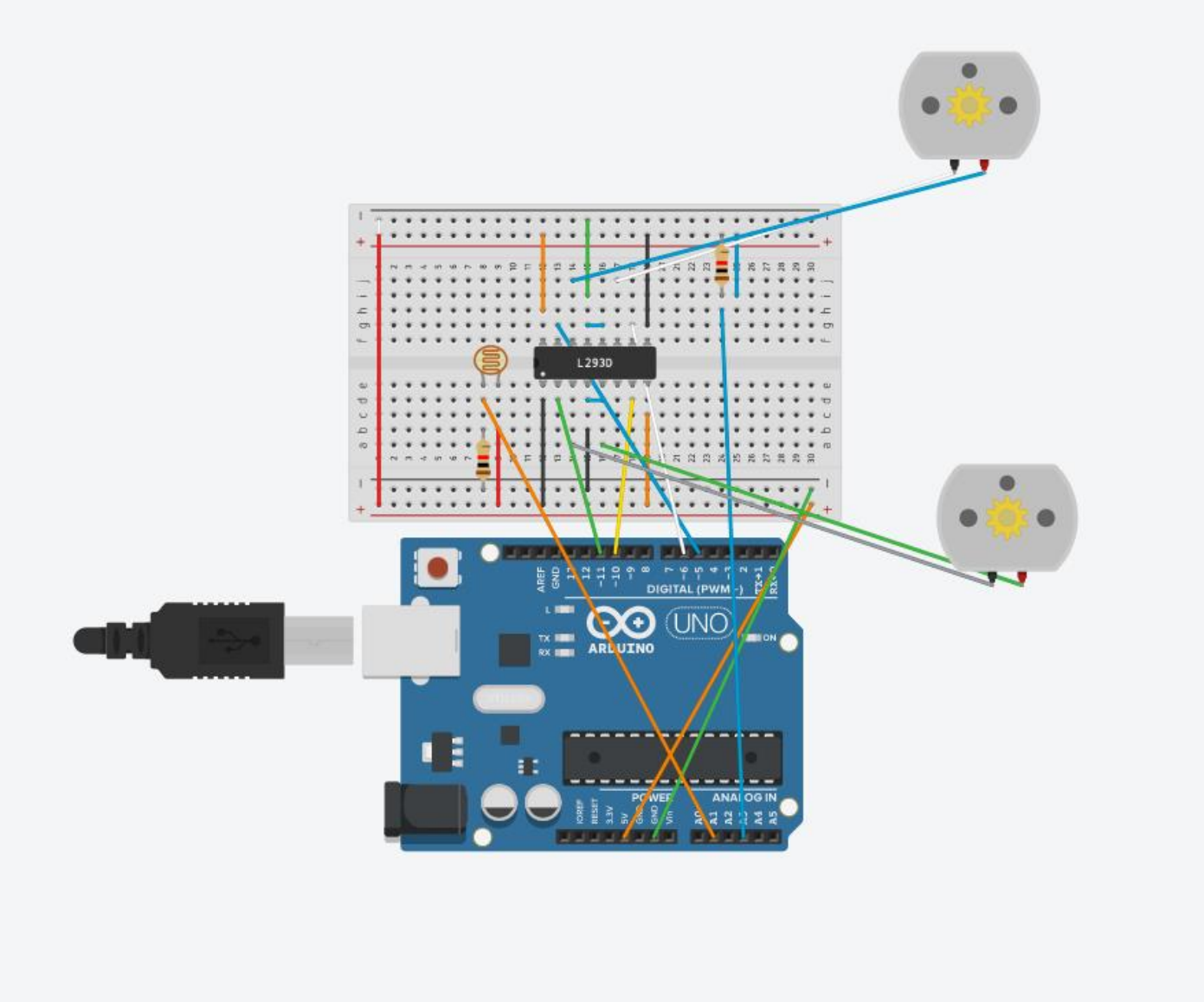

Figure A

The hardware I am using is Arduino Uno. Other items such as breadboard, two DC motors, L239D chip, and photoresistor are also seen in this figure. The setup is depicted in Figure A, where the 2 DC motors are connected through a wire on the breadboard. There is a wire connected to GND and 5V.

D. **Software**

```
const int motorpin1 = 5;// use this
const int motorpin2 = 6;
const int motorpin3 = 10;
const int motorpin4 = 11; // use this
const int apin=1;
const int bpin=3;
int val0=0;
int val2=0;

void setup() {
Serial.begin(9600);
pinMode(motorpin1,OUTPUT);
pinMode(motorpin2,OUTPUT);
pinMode(motorpin3,OUTPUT);
pinMode(motorpin4,OUTPUT);
pinMode(apin, INPUT);
pinMode(bpin,INPUT);
}
void loop() {
val0 = analogRead(apin);
val2= analogRead(bpin);
Serial.println(val0);
if( val0 < 650 ){
analogWrite(motorpin2, 0);//stops when detects black line
analogWrite(motorpin4, 0);}
else{
  analogWrite(motorpin2, 255);
  analogWrite(motorpin4, 255);
}
}


//}
//else{
//digitalWrite(motorpin1, HIGH);
//digitalWrite(motorpin2, LOW);//
//}
//val0 = analogRead(apin);
//Serial.println(val0);

if( val0 > 650 ){
//digitalWrite(motorpin3, LOW);
//digitalWrite(motorpin4, HIGH);
//}
//else{
//digitalWrite(motorpin3, HIGH);
//digitalWrite(motorpin4, LOW);//
//}

//Straight
//analogWrite(motorpin2, 255);
//analogWrite(motorpin4, 255);
//delay(7000);
//
////Right
//analogWrite(motorpin2,255);
//analogWrite(motorpin4, 0);
//delay(1000);
```